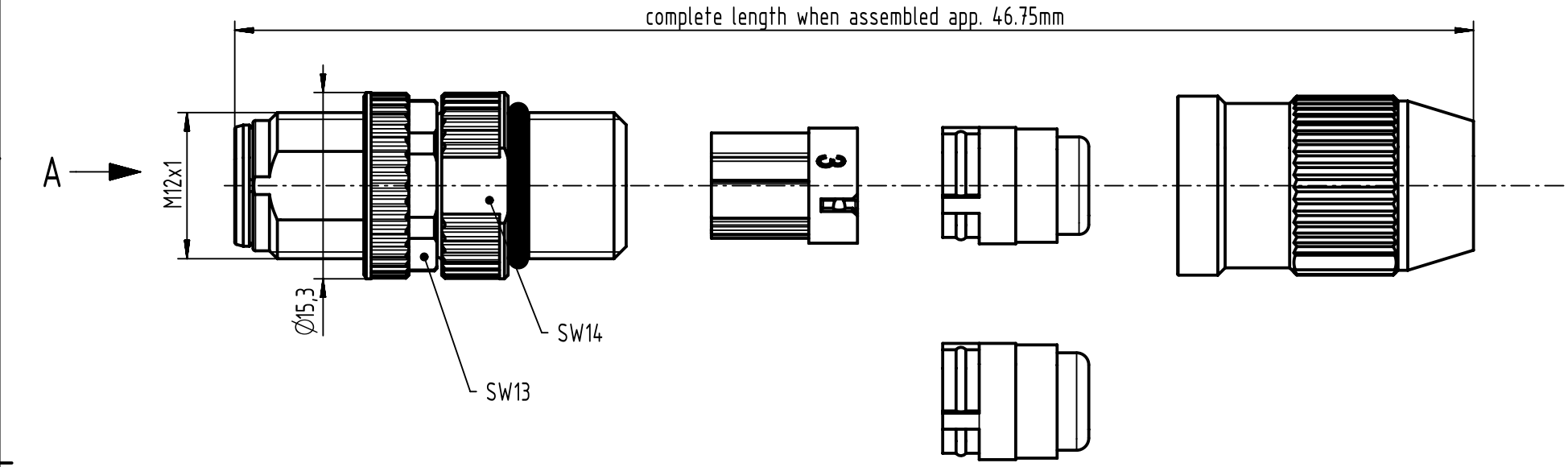

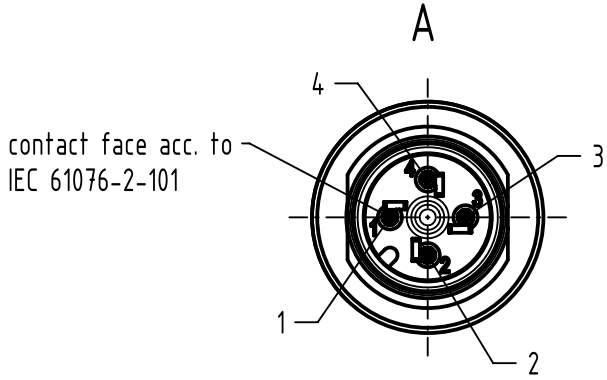

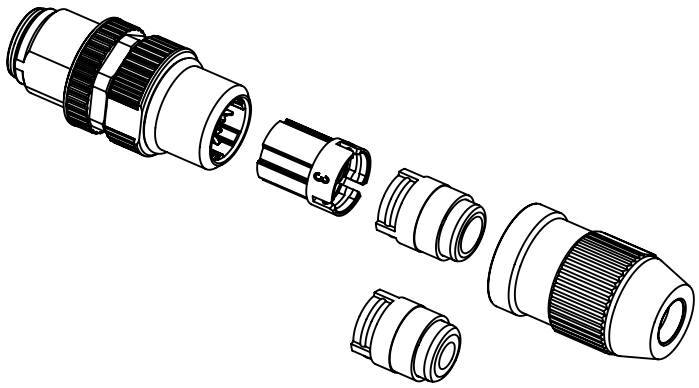

conductor cross section	0.14 - 0.34mm² AWG26-AWG22
cable outside diameter	2.9 - 5.1mm

All Dimensions in mm
Original Size DIN A4

Scale 2:1

Free size tol.

Ref.

Sub. TB 21031111405 EC03545 2011-07-15

All rights reserved

Department EC PD - DE

HARTING Electronics GmbH
D-32339 Espelkamp

Created by	Inspected by	Standardisation	Date	State
EISFELD	WELLMANN	HOFFMANN	2016-07-26	Final Release

Title M12-S male 4-pole

Doc-Key / ECM-Nr.
100228396/UGD/002/A
500000106933

Type TB

Number 21031111405

Rev. A

Page 1/1

A4